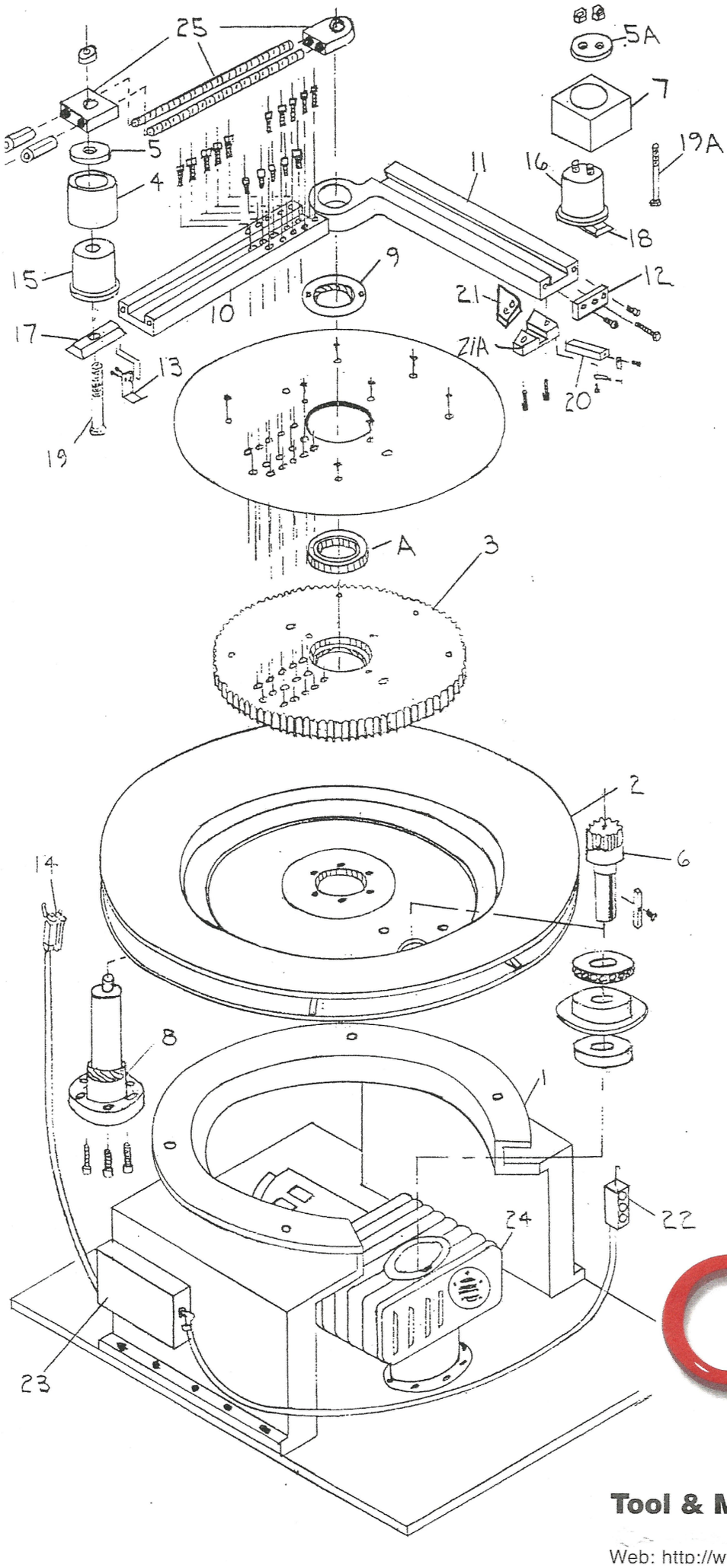

D-15

PARTS LIST

1. Stand
2. Housing
3. Bull Gear
4. Roller
5. Roller Cap

5A. Stop Block Cap

6. Pinion Assembly
7. Stop Block
8. Spindle
9. Nut
10. Bending Arm
11. Stop Arm
12. End Plates (2)
13. Tripper
14. Limit Switch & Bracket (3)
15. Roller Stud
16. Stop Block Stud
17. Roller Slide
18. Stop Block Slide
19. Roller Stud Bolt

19A. Stop Block Stud Bolt (2)

20. Latch Pin
21. Latch Plate
22. Push Button Station
23. Magnetic Starter
24. Motor
25. Link Assembly

A. Bearing for Part 8

PEDRICK

Established 1875

Phone: (856) 829-8900
Fax: (856) 829-8902

Tool & Machine Company, Incorporated

• P.O. Box 190 • Riverton, New Jersey 08077

Web: http://www.pedrick.com • E-Mail: info@pedrick.com